ATTACHMENT 4

REV	DATE	PURPOSE OF ISSUE	PREPARED	CHECKED	APPROVED	AUTHORIZED
0	March 22, 2024	Issued For Bidding	HERRU	HERI K.	MURASATO	

CONTENTS

Description **Page**

1. Purpose — 5
2. Scope — 5
3. Applicable Document — 5
   - 3-1 Industry Codes Standard — 5
4. Responsibility — 6
5. Material Preparation — 7
   - 5.1 Pre Requirement Before Installation — 7
   - 5.2 Preparation Replacement — 7
6. General Requirement — 8
   - 6.1 Replacement Piping System Installation Method — 8
     - 6.1.1 Replacement Piping Jointing Requirements — 8
     - 6.1.2 Preparation Stainless Steel For Material At Site — 8
     - 6.1.3 Joint Fit-up / Welding — 9
     - 6.1.4 Pipe Spool Painting — 11
7. Methods / Procedure — 11
   - 7.1 Pipe Installation on Pipe Rack — 11
   - 7.2 Piping Installation Around Equipment — 13
   - 7.3 Piping Installation At Pipe Sleeper — 14

7.4 Installation of Pipe Support and Steel Structure — 14

7.5 Flange Joint Tightening — 14

7.6 Pressure Testing and Lay-up — 15

7.7 Touch-up and Coating — 15

7.8 Cleaning and Re-Brushing — 15

7.9 Restoration — 15

7.10 Installation Scaffolding — 16

7.10.1 Step by Step Guide for the Dismantling of Scaffolding — 16

7.11 Excavation — 17

7.11.1 The Risk Management Process — 17

7.11.2 Emergency Plan — 21

7.11.3 Excavated Material and Loads Near Excavation — 22

7.11.4 Plant and Equipment — 25

7.11.5 Excavation Methods — 25

7.11.6 Hydraulic Systems — 28

7.11.7 Removal of Shoring Supports — 38

8. Quality Control — 39

9. Health Safety And Environment Requirements — 39

Revision History

Rev	Date	Description of Change
0	March 22, 2024	For Bidding

1.0 Purpose

1.1. This method statement covers on site installation of pre-fabricated and site fabricated steel pipe work including supports, Steam Traps, valve, Gasket and Bolt Nut for ReplacementPiping on Ethylene Area.

This procedure is to define the method used to ensure that the Replacement Piping System installation is as per project requirements. System comprises all pipes, steam traps, valves, gasket, bolt nut and all accessories.

By following this statement method we can ensure that components connected thereto as an integrated replacement piping system, installation final connection and workmanship, is correct and acceptable. Also we can make sure that all the work conforms to the contract document an in addition to piping works, this procedure will ensure that the replacing pipe to all install and return all existing piping have not replaced.

2.0 Scope

2.1. This Statement method covers the procedure of above ground Piping Installation Works

3.0 Applicable Documents

1. Isometric Drawing for Piping Threads, General Purpose.
2. Work List.
3. Piping Internal Cleaning Procedure.
4. Bolt Tensioning Procedure.
5. Inspection Procedure at Site.
6. Material control procedure for Piping Material at Field

3.1 Industry Codes Standard

3.1.1 ASME B1.20.1 Pipe Threads, General Purpose
3.1.2 ASME B31.3 Process Piping
3.1.3 ASME B46.1 Surface Texture (Surface Roughness Waviness and Lay)
3.1.4 ASME B16.20 Metallic Gasket for Pipe Flange
3.1.5 ASTM C-547 TYPE II or TYPE III for Insulation

4.0 Responsibility

4.1 Site Manager shall implement all HSE requirement for the job, study, analyze and schedule all construction activities with his department to include manpower and equipment line up as well as other possible resources required for the successful implementation of the construction work activities. He shall study all aspects of work procedure as per Technical Scope of Work.

4.2 Piping Supervisor shall study and review necessary documents for the installation works to include, technical scope of work, specification, bill of quantities, planned milestone fates and construction procedure to support to his supervisor. He Shall monitor the availability of materials in accordance with construction schedules. He shall directly report to Site Manager. Piping Supervisor shall be directly reporting to the Piping Superintendent and responsible for the implementation and control of all site activities per Technical Scope of Work and lates approved construction drawings. He shall coordinate with others discipline to visualize possible conflict in the drawing as well as in the schedules to provide other option in preventing unnecessary delays and obstructions.

4.3 The welding Supervisor and Foreman are solely responsible to ensure that all welding works are in conformance with applicable codes, standards, specifications, and approved procedures.

4.4 Piping Foreman shall be responsible for the direct work supervision at site and ensure that the work is performed in accordance with Technical Scope of Work and latest Approved for construction drawings, He shall monitor the availability of materials in line with his required schedule at site and report directly to Piping supervisor

.

4.4 QC Inspector shall be responsible for inspection and monitoring of the work and ensure that the work is performed and properly documented in accordance with Project requirements.

4.5. Safety Supervisor shall be responsible for monitoring safety aspects and ensuring that the work is done in accordance with Safety Standard Procedure. He shall discuss with the workers the characteristics of related materials and status of work area giving reminders as an additional point to work safely.

5.0 Material Preparation

5.1. Pre Requirements before Installation

5.1.1 All materials and documentation relevant to a particular section of works will be checked by the Construction Department prior to the commencement of work ensuring that these are of the correct type as reviewed by the Client.

5.1.2 Before commencement of any construction works, pre-inspections will be carried out on all

materials prior to them leaving the storage area. Invite the client or consultant to attendthe material receiving inspections asper their discretion.

5.1.3 Prior to the commencement of any construction works, areas and access will be inspected to confirm that they are in a suitable condition for safe construction works to commence

5.2. Preparation Replacement

5.2.1 Mechanical Supervisor will instruct tradesmen regarding the execution of the works and will distribute all necessary approved construction status drawings of the latest revision. The supervisor will also check that tools and equipment available are in compliance with the contract requirements. Verify sleeves to be fixed at the required locations and are of the same material.

5.2.2 By means of string and chalk lines the actual pipe layout will be identified, so as to allow for the installation of pipe supports, anchors, and guides.

5.2.3 Support for replacement piping will be fixed in place by an approved construction method to suit the elevation of piping as indicated on the approved construction drawings.

5.2.4 Hanger rod sizes will be in accordance with the requirements of the specification. The spacing of supports for steel pipework will be in accordance with Contract Specifications.

5.2.5 Supports will be arranged as near as possible to pipe joints and any change in direction. Addition supports will be added within 300mm of any branch lines. Heavy in-line equipment will be supported independently.

5.2.6 Vertical ricing pipework will be supported at the base or as indicated on the approved construction drawing.

5.2.7 Pipework will be installed so as to allow sufficient space for expansion or contraction and thermal insulation. During installation open ends of pipes will be protected by plastic caps, which will only be removed when the adjoining section is installed.

6.0 General Requirements

6.1 Replacement Piping System Installation Method

6.1.1 Replacement Piping Jointing Requirements

- The demolition of existing pipe should be done before the replacement pipe
- The length will be cut to the correct in accordance with actual dimension
- After the suitable the end of pipe has been cut, burrs, surplus oil and swarf will be removed prior to be beveled in place
- Pipe ends will be bevel by use of an appropriate grinding machine.

- Bevel of end pipe will be applied with the approved type.
- Maximum 6 meters to 12 meters length from open end depending on pipe size can be allowed for application on internal lining on girth welding point. Welding point to be lined shall be located within a certain length from open end. Welding point on internal lining work shall be hand-over to other party. Erection of next spool shall be after inspection of lining on the point is acceptable. This condition shall be applicable for the piping system which has internal lining, but not to the others.

6.1.2 Preparation Stainless Steel For Material At Site

- Straight pipe cutting and pipe end preparation shall be carried out using plasma or mechanical cutting. Cleaning shall be applied when there is scale on surface.
- Segregate pipe spool from other materials when temporary laid down at job site or at fabrication shop prior to erection or fabrication.
- Back purging shall be maintained until at least 10 mm of the weld deposit thickness has been completed. The use of nitrogen as a backing gas for austenitic stainless steels is prohibited.
- Sponge jig shall be used to keep back seal gas inside. Obtain approval from CAP if other kinds of material are used like soluble purge dam paper, PVOH film. The kind of Item shall be filled in Daily Welding Report.

- Cutting disk or flame cutting shall be used for cutting carbon steel pipes, beveling is also acceptable only flame cut bevels shall be ground to a smooth finish, nicks and grooves in the bevel are not allowed.
- For low alloy steel, Flame cut or mechanical means such as cutting disk are acceptable. After flame cutting, approximately 1.5mm of material must be removed from the surface of beveling by grinding.

6.1.3 Joint Fit-up / Welding

Butt joint

- Prior to welding check for cleanness of inside piping, cleanliness of groove, alignment of piping and bevel angle and root face for any deficiencies.
- Assure for suitable screen or shelters for protection from weather. Welding work shall not be done in case of rainy and storm winds, used Fire Blanket or Cubical.
- Unless specified otherwise in the qualified welding procedure, a root gap of about 3 mm shall be required for joints (including branch connections). One exception is that where the pipe wall thickness is less than 4.5 mm, a 1.5 mm root gap shall be used with tolerances of +1.5 mm and minus zero. No gap larger than 1.5mm, measured before welding, shall exist between the periphery of a reinforcing pad and the pipe to which it is attached. Internal misalignment of butt joints shall not exceed 1.5 mm.

- GTAW process shall be used for piping and set-in fittings less than 25.4 mm nominal pipe size for all passes thru butt welding.
- GTAW process shall be used for the root pass of butt welds without backing in piping and set-in fittings of 50.8 mm nominal pipe size or less, except for vent and drain piping open to the atmosphere.
- GTAW process shall be used for the root pass of single-sided groove welds without backing made with stainless steel or nickel-based consumables.
- Assure that welding procedure strictly adders to the applicable Welding Procedure Specification.

Socket Joint

- Gap control for socket weld shall be in accordance with (Special Process Procedure for Gap Control for Socket Weld and Back Welded Treaded Fittings).
- He axial gap between male and female component shall be maximum of 3mm and minimum of 1.5 mm.

Threaded Piping

- Prepare cutting and threading equipment and tool for each type of materials, thickness and diameter range. Cutting and threading tools used for carbon steel shall not be used for cutting stainless steel pipes to prevent contamination.
- Tools for carbon steel pipes shall be color- coded to avoid mix-up use with stainless and non-ferrous alloy steel pipes.
- Before cutting, ensure correct cutting lines are marked on pipe according to spool drawings.
- The minimum length of the engaged threads pipe shall meet the requirements of ASME B1.20.1 for taper pipe thread. The minimum number of engaged pipe threads shall meet the requirements of CAP “Limitations on Pipe Joints and Components”.
- If seal welding is required for threaded connections, it shall adhere to the requirements specified.
- If seal weld is not required for design temperature of 400°F (204°C) and below use Loctite or PTFE joining tape or approved joining compound.
- Design temperature of above 400 °F (204 °C) shall be Seal weld wherever possible, otherwise jointing compound must be applied after CAP approval.

Tolerance

- For fabricated piping the dimensional tolerance shall be limited to the value.
- Piping 3 inches nominal pipe size and above and connected to machinery/equipment, flange alignment shall be within the following limits.
- Vertical bolt hole offset of ± 2.4mm.
- Horizontal bolt hole offset of ±2.4mm.
- Rotational offset of ±2.4mm.

- Flange face tilt across diameter:
  0.025mm per 25 mm (0.001 inch per inch) of flange outside diameter up to a maximum of 0.672 mm (0.030 inch), and 0.254mm (0.010 inch) for all flanges with an outside diameter less than 10 inches.
- Flange face separation, gasket thickness: ± 1.6 mm.
- Combination of vertical, horizontal and rotational offset: ± 3.2 mm.

- Prior to fit-up, pipe materials for spool field fabrication shall be checked for traceability marking and ensure the materials are in accordance with the approved spool/isometric drawing.
- Pipe to be welded shall be fixed with the use of jigs, clamps or direct tack welding. Tack welding and/or full welding shall be qualified according to the approved applicable WPS.
- Tack welds shall be of sufficient size to maintain joint alignment. The recommended tack thickness shall be 3.2-4.8mm and length shall be 12.5-25.4mm. The minimum number of tack welds shall be :
- Pipe diameter of 101.6mm or less : three (3) equally spaced tacks.
- Pipe diameter above 101.6mm minimum of four equally spaced tacks. The designated inspector should determine if more tacks are needed.

- Bridge tack (located above the root area) are acceptable.
- Temporary weld attachments for temporary handling and support shall be subject to CAP's approval and shall be removed according to an approved procedure and ground flush with the base material subject to non-destructive testing (magnetic particle or Dye Penetrant). These temporary attachments shall be made with compatible material.
- Flange face surfaces shall be protected during fit-up by putting suitable cover/duct tapes to meet acceptance criteria.
- Bolt holes of flange joints shall be installed to be symmetrical against the vertical and horizontal center-line of the pipe and shall match the orientation of the matting flange, unless otherwise indicated on the relevant drawings.
- For large flanges, flange jack shall be used when lifting is needed. 8.4.5.13 Pipe spool open ends shall be protected with end caps where dirt, dust and other foreign objects will be prevented from getting inside the pipe spools. In addition, pipe ends shall be invariably protected at all times.
- Flattening of bends, measured as the difference between the largest and the smallest outside diameter at any cross section, shall not exceed 5% of the nominal diameter of the pipe. Flattening of bends at weld ends shall not exceed 3% of the nominal pipe diameter.

6.1.4 Pipe Spool Painting

- Painting work shall be done in accordance with CAP

7 METHODS / PROCEDURE

7.1 Pipe Installation on Pipe Rack

7.1.1 Prior to installation/erection, bellow 30 inches diameter pipes shall be internally cleaned by air blowing, 30 inches and above pipe diameter shall be cleaned by manual such as rags or cloth, sweep cleaning shall be applied instead of air blowing. All prefabricated pipe spools shall be visually inspected for cleanliness, any matter or debris found inside the pipe line shall be removed. Piping Internal cleaning procedure shall be in accordance with CAP Specification.

7.1.2 Piping end shall be covered after inspection and care shall be exercised during installation/erection to prevent damage. Cover end of piping until fit-up of joint to succeeding pipe section.

7.1.3 Prior to installation/erection on pipe rack structure, the following shall be served using authorized bench mark

- Center line of pipe shall be put on the beam.
- Coordinates of interface point shall be checked.
- Pipe spools to be erected on pipe rack structure shall be erected to position using crane and chain blocks to facilitate pulling/moving of pipe spools to inner portion of the pipe rack steel structures and piping around equipment as applicable. Use only nylon sling for erection of coated pipes and pipe supports.
- Replacing of random pipes shall start from the opening end of the pipe rack structure's shall be erected to position using crane, pipe rollers and chain block to facilitate of pulling/moving of random pipes at the inner portion of the pipe rack steel structures. Use only nylon sling for erection of coated pipes.
- Erection/installation of 24 inches and above internal lining spool on pipe rack structure shall start from the spool with stopper support.
- Piping Installation Scheme Using Pipe roller at any applicable Piperack.
- Pipes will be loaded using cranes into the extended scaffolding at the designated/end of Piperack or side loading if possible.
- Install extended scaffolding at designated loading area at first level. Once the erection of pipes at this level was completed, additional extended scaffold will be installed for the next elevation. Additional hanging scaffold with access walkway will be installed for fit-up and full welding of pipe joints and supports not accessible by the hanging mat scaffold.
- Install, align and fix the pipe roller assemblies at rack beams. Pipe rollers will be employed primarily to move random lengths along the racks.
- Install pulley complete with pull cable. The pulley and cable will be used to pull the pipes from loading end, along the pipe rollers, and to its final location.
- Cranes will pick up the pipes either directly from trailers or from temporary lay down nearby the pipe rack.
- Pipes will be lifted by cranes using correct nylon slings and will be rig to position at pipe rollers in working platform.

- Welding together of 6.0m random lengths to make 12m can be done optionally at ground level. RT shall be carried out on ground after double jointing (as applicable).
- Once the pipe is initially positioned at pipe rollers (two spans), hook the pipe to a pull cable. A special hook attachment will be used so as not to damage bevel at pipe ends.
- While the pipe is being pulled, a watcher will check the travel of pipe such that it will safely and correctly ride the succeeding pipe rollers. A signaling system for safe execution and control of pulling will be employed.
- Once the length of pipe reaches its destination, it will be remove from pipe rollers using chain blocks.
- Succeeding pipe lengths will be brought to its designated position.
- Pipe spools such as expansion loops, branch take-offs and others will be placed directly in position using cranes and/or chain blocks where required. Fit up and welding of spooled pieces will be done in place utilizing the mat type scaffold or localized scaffold.
- For pipelines without attachments, a double-ended welding execution will be adopted- i.e. the first two random length rigged to position will be fitted up and full welded together. The succeeding lengths will be installed in the same manner. The double-ended lengths are then welded together until the entire run is completed. RT shall be carried out on the ground after double jointing (as applicable).
- At interconnecting pipe racks, the same roller system will be utilized where new steel works is installed and when there are no obstructions.

7.2 Piping Installation Around Equipment

7.2.1 Erection of pipe spools shall start from static equipment nozzles where spool flanges are fitted to equipment nozzle flanges. Do not tight the bolt on rotary equipment flange and pipe unless witnessed or checked by rotary Supervisor.

7.2.2 Blind spade/gasket shall be installed between equipment nozzle and pipe spool in order to avoid contamination until completion of piping pressure test.

7.2.3 Piping installation shall be conducted after receiving of “Work Release Notice” from mechanical section.

7.2.4 It shall be confirmed whether the flange faces for inlet and outlet nozzles of the rotary machine are free from damage and distortion. The flange facing shall be judged by visual comparison with a comparison block of Ra Standards conforming to ASME B46.1.

7.2.5 Temporary gasket shall be inserted between flange face and nozzle of the rotary machine so that necessary space between them can be kept The temporary gasket shall be a blind gasket to avoid entry of foreign materials into the rotary equipment and also shall be made of soft materials such as sheet gasket to avoid any damage to the flange face. It shall be kept in position until final flange alignment. The size of temporary gasket shall be wider than flange dimension.

7.2.6 Field welding which affects the alignment of the rotary machine nozzle flange and piping flange shall be done by a method enabling the minimization of distortion due to welding. The

rotary equipment nozzle flange and piping flange shall be isolated during field welding, do not install bolt and nuts.

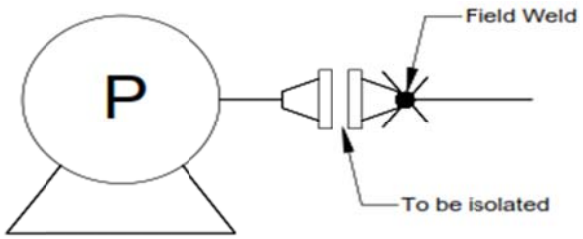

7.2.7 Heat by welding and PWHT on first piping nozzle flange shall not transfer to the flange of equipment.

7.2.8 The final flange alignment of piping connected to rotary machines shall be conducted after all items of piping work including pressure tests, cleaning work, etc. are completed.

7.2.9 Remove all temporary supports. Spring supports shall be kept in a fixed condition.

7.2.10 All protective covers and plugs on the equipment nozzles shall be maintained until the piping is ready to connect to the nozzle.

7.2.11 Welding on piping connected to equipment is not allowed unless the welding machine ground lead is connected directly to the part being welded. This is to avoid damage to the equipment by stray electrical currents.

7.2.12 Pipe flange faces connecting to the primary flange of rotating equipment shall be aligned and within the limits or tolerance.

7.2.13 Proceed to initial tightening of flange bolts in snug-tight condition using hand wrench.

7.2.14 After initial alignment the rotary machine nozzle and piping shall be disconnected from each other and checked to confirm that the tolerances are adhered to.

7.2.15 If specified tolerance is not satisfied, loosen piping flanges from the equipment so correction shall be made to piping or supports.

- Adjust the piping supports.
- Adjust the flange connection of the piping in combination with the method.
- Adjust the piping by cutting and re-welding of appropriate portion of the piping. Hydrostatic test or equivalent test shall be made for the concerned piping spool.
- Proceed with above steps until the required shaft movement is attained and hand bolting is finalized.
- After confirmation of the final flange alignment, permanent gaskets shall replace temporary ones and all flange bolts shall be equally and fully tightened with sufficient care.
- After final bolt-up, final shaft alignment shall be verified and the equipment shall be hand rotated to ensure that neither binding or case distortion has occurred during piping installation.

7.3 Piping Installation at Pipe Sleeper

7.3.1 Piping installation at pipe sleeper and other areas shall utilize cranes or manual rigging method (sticking-out method) to directly install the spool and straight lengths into position.

7.4 Installation of Pipe Support and Steel Structure

7.4.1 Pipe supports, anchors, pipe guides, and shoes, etc. shall be installed in proper position in accordance with relative drawings such as standard support drawings, ISO drawing and spool drawing.

7.5 Flange Joint Tightening

7.5.1 Gasket Installation

- Clean both flange faces to be joined.
- The gasket shall be verified for correct type, rating, dimension and compatibility with the flange facing. It shall be free from any damage particularly in the seating element.
- Hold gasket in correct position on clean flange face until flanges meet.
- Using only undamaged rust free bolts, nuts and washers, lubricate bolt threads and all mating surfaces using an automotive grade of oil or grease.

7.5.2 Manual Torque.

- When flange bolts are tightened, the alignment of the center-line and parallelism of the flange faces shall be checked, and all the bolts shall be tightened equally with sufficient care.
- Lubricant for bolts and nuts shall be Jet-Lube SS-30 or other acceptable lubricants.
- Select the correct size and hex / socket of torque wrench as applicable.

7.5.3 Hydraulic Torquing / Tensioning

- Hydraulic Bolt Tensioning requires a specialist skill. Only operatives trained and competent person to use the equipment and up to the standards shall carry out the controlled breakout/assembly and tightening of bolted flanged connections. Subcontractor for hydraulic bolt tensioning shall be approved by Company.
- Set the torque value on the console by setting the Torque Control Knob according to the desired bolt torque for tightening or loosening as applicable.
- Bolt tensioner shall be used.
- All flanges and bolt shall be prepared and pre-assembled prior to tensioning.

7.6 Pressure Testing and Lay-up

7.6.1 Approved test package shall be made available for reference in setting up the pressure test of line or system, if this test is required, it will be performed by CAP.

7.7 Touch-up and Coating

7.7.1 The touch-up and repair of coated surfaces at construction site shall follow “Supplementary Specification for External Coating”.

7.7.2 External coating schedule for underground piping shall be referred to the individual data sheets, piping line index.

7.8 Cleaning and Re Brushing

7.8.1 The Cleaning and re brushing surface pipe work at construction site shall only be spot cleaned in corrosion area by means of power tool brush cleaning and the spot primed, before applying a finish coat, unless otherwise specified.

7.9 Restoration

7.9.1 Remove all temporary items that are installed during Testing.

7.9.2 Items that were removed during testing shall be reinstalled. Items such as instrument air tubing, check valves disc which were disconnected before testing shall be re-connected.

7.9.3 Inspect restoration of piping system, verifiers-assembly and flow arrow direction of valves and other miscellaneous components where applicable.

7.10 Installation Scaffolding

A scaffold is a temporary structure erected to support access or working platforms. Scaffolds are commonly used in construction work so workers have a safe, stable work platform when work cannot be done at ground level or on a finished floor.

Scaffolding in this Guide means the individual components, for example tubes, couplers or frames and materials that when assembled form a scaffold. Scaffolding is classified as plant under Work Health and Safety (WHS) Act.
Scaffolding work is erecting, altering or dismantling a temporary structure erected to support a platform and from which a person or object could fall more than 4 meters from the platform or the structure. Scaffolding work must be undertaken by a person holding the appropriate class of high risk work license.

The Scaffolding installation methods will be used for the following work:

- Spool pipe decontamination facility of process line Olefin Plant.

7.10.1 Step-by-step guide for the dismantling of scaffolding:

- Planning: Before dismantling the scaffolding, you should plan the dismantling process to ensure that it is done safely and efficiently. This includes determining the order in which the components will be removed and the location where they will be stored.
- Removing the Scaffold Deck: The scaffold deck should be removed first. Make sure to remove any debris or materials that may have accumulated on the deck.
- Removing the Guardrails and Toe boards: The guardrails and toe boards should be removed next. Make sure to store them in a safe location where they will not be damaged.
- Removing the Transoms: The transoms should be removed next. Make sure to store them in a safe location where they will not be damaged.

- Removing the Ledgers: The ledgers should be removed next. Make sure to store them in a safe location where they will not be damaged.
- Removing the Standards: The standards should be removed last. Make sure to store them in a safe location where they will not be damaged.
- Removing the Base Plates: The base plates should be removed last. Make sure to store them in a safe location where they will not be damaged.
- Cleaning the Site: Once the scaffolding has been removed, make sure to clean the site and remove any debris or materials that may have accumulated during the installation and use of the scaffold.

7.11 EXCAVATION

Excavation work means work to make an excavation or to fill or partly fill an excavation. Excavation work commonly includes work involving the removal of soil or rock from a site to form an open face, hole or cavity, including trenches, shafts and tunnels. Excavation work is generally carried out using tools, machinery or explosives. Requirements imposed under the WHS Act and WHS Regulations relating to excavation work do not apply to a mine, a bore to which a relevant water law applies or a trench used as a place of interment.

Work connected with an excavation is a type of 'construction work'. Therefore, when carryingout excavation work, the requirements relating to construction work must also be complied with.

Construction work including work connected with an 'excavation' carried out in or near:

- a shaft or trench with an excavated depth of greater than 1.5 metres, or
- a tunnel

is 'high risk construction work' for which a Safe Work Method Statement (SWMS) must be prepared.

The Excavation methods will be used for the following work:

7.11.1 The Risk Management Process

- Identifying the hazards

The first step in the risk management process is to identify all hazards associated with excavation work. This involves finding things and situations that could potentially cause harm to people. Hazards generally arise from the following aspects of work and their interaction:

- physical work environment
- equipment, materials and substances used
- work tasks and how they are performed, and
- work design and management

Hazards may be identified by looking at the workplace and how work is carried out. It is also useful to talk to workers, manufacturers, suppliers and health and safety specialists and review relevant information, records and incident reports.

Examples of excavation specific hazards include:

- underground essential services including gas, water, sewerage, telecommunications, electricity, chemicals and fuel or refrigerant in pipes or lines
- the fall or dislodgement of earth or rock
- falls from one level to another
- falling objects
- inappropriate placement of excavated materials, plant or other loads
- the instability of adjoining structure caused by the excavation
- previous disturbance of the ground including previous excavation
- the instability of the excavation due to persons or plant working adjacent tothe excavation
- the presence of or possible in-rush of water or other liquid
- hazardous manual tasks
- hazardous chemicals, which may be present in the soil where excavation work is to be carried out
- hazardous atmosphere in an excavation, which could result from practices like using Methyl Ethyl Ketone (MEK) solvent for PVC pipes in poorly ventilated trenches
- vibration and hazardous noise, and
- overhead essential services, such as powerlines, and ground mounted essential services such as transformers, gas and water meters.

➢ Assessing The Risk

A risk assessment involves considering what could happen if someone is exposed to ahazard and the likelihood of it happening. A risk assessment can help you determine:

- how severe a risk is
- whether any existing control measures are effective
- what action you should take to control the risk, and
- how urgently the action needs to be taken.

Many hazards and their associated risks are well known and have well established and accepted effective control measures that are used in a particular industry and are suited to the circumstances in the workplace. In these situations, the second step to formally assess the risk is not required. If after identifying a hazard you already know the risk and how to control it effectively, you can implement the controls without undertaking a risk assessment.

- identify which workers are at risk
- determine what sources and processes are causing that risk
- identify if and what kind of control measures should be implemented, and
- check the effectiveness of existing control measures.

A risk assessment may be appropriate to reuse in situations where all the hazards, tasks,things or circumstances are the same and no worker or other person will be exposed to greater, additional or different risks.

When assessing the risks associated with excavation work you should consider thefollowing:

- local site conditions including access, ground slope, adjacent buildings and structures, surface and underground water courses and trees

- depth of the excavation
- soil properties including variable soil types, stability, shear strength, cohesion, presenceof ground water, effect of exposure to the elements
- fractures or faults in rocks including joints, bedding planes, dip and strike directions and angles, clay seams
- specialised plant or work methods required, for example ground support
- the method(s) of transport, haul routes and disposal
- what exposures might occur, for example noise, ultraviolet radiation or hazardouschemicals
- the number of people involved
- the possibility of unauthorised access to the work area
- local weather conditions, and
- the length of time the excavation will be open.

Review available information

Information and advice about hazards and risks relevant to particular industries and types ofwork is available from regulators, industry associations, unions, technical specialists and safety consultants.

Manufacturers and suppliers can also provide information about hazards and safety precautions for specific substances (safety data sheets), plant or processes (instructionmanuals).

Analyse your records of health monitoring, workplace incidents, near misses, worker complaints and the results of any inspections and investigations to identify hazards. If someone has been hurt doing a particular task, then a hazard exists that could hurt someone else. These incidents need to be investigated to find the hazard that caused theinjury or illness.

- Controlling The Risk

The hierarchy of control measures

The WHS Regulations require duty holders to work through the hierarchy of control measures when managing certain risks; however, it can be applied to any risk. The hierarchy ranks control measures from the highest level of protection and reliability to the lowest.

You must, so far as is reasonably practicable:

- first, eliminate risks by eliminating hazards; this is the most effective control measure,for example undertake work above-ground to eliminate the use of trenches, tunnels or shafts and the need to work below-ground
- then substitute hazards with something safer, for example using an excavatorwith a rock breaker rather than a manual method
- then isolate hazards from people, for example using concrete barriers to separate pedestrians and powered mobile plant to reduce the risk of a collision
- use engineering controls to minimise any risks that have not been eliminated,for example benching, battering or shoring the sides of the excavation to reduce the risk of ground collapse.
- then use administrative controls to minimise any remaining risks, for example benching, battering or shoring the sides of the excavation to reduce the risk ofground collapse.

- then use personal protective equipment (PPE) to minimise any risks that remain, for example providing workers with hard hats, hearing protectors andhigh visibility vests.

Using PPE, in some circumstances, may cause problems that, without proper managementcould become a health and safety risk, for example it may create new hazards through its use.

The control measures you apply may change the way work is carried out. In these situations, you must consult your workers and develop safe work procedures, and provide your workers with training, instruction, information and supervision on the changes.

Combining control measures

A combination of control measures may be used to minimise risks, so far as is reasonably practicable, if a single control is not sufficient for the purpose. In most cases, a combinationof the control measures will provide the best solution to minimise the risk to the lowest levelreasonably practicable.

You should also ensure that the control measures you select do not create new hazards, for example electrical risks from contact with overhead power lines or crushing and entanglement from plant like EWPs. If any new hazards are created they must also be controlled.

➢ Maintaining and Reviewing Control Measures

Control measures must be maintained so that they continue to protect workers and other people from the hazards associated with excavation work. The control measures must be:

- fit for purpose
- suitable for the nature and duration of the work, and
- installed, set up and used correctly.

You must review and as necessary revise control measures in the following circumstances:

- the control measure does not control the risk it was implemented to control so far as isreasonably practicable
- before a change at the workplace that is likely to give rise to a new or different healthand safety risk that the control measure may not effectively control
- if a new hazard or risk is identified
- if the results of consultation indicate that a review is necessary, and
- if a health and safety representative requests a review if that person reasonablybelieves that:
  - a circumstance in any of the above points affects or may affect the health and safetyof a member of a work group represented by the health and safety representative
  - the control measure has not been adequately reviewed in response tothe circumstance.

Where excavation work is high risk construction work, common review methods include workplace inspection, consultation, testing and analysing records and data. When reviewing control measures, a SWMS must also be reviewed and revised where necessary when reviewing control measures.

Control measures must be reviewed and revised in consultation with workers and their health and safety representatives. Workers are often able to quickly identify and propose solutions to problems when they occur.

Controls should be checked by using the same methods as the initial hazard identification and risk assessment. If a hazard is not eliminated or minimised by the chosen control measures, go back through the risk management steps, review the information and make further decisions about risk control.

7.11.2 Emergency Plan

A PCBU such as an excavation contractor at a workplace must ensure there is an emergency plan for the workplace. An emergency plan is a written set of instructions outlining what workers and others at the workplace should do in an emergency. The emergency plan should be capable of covering a range of unexpected emergency incidents, for example ground slip, engulfment, flooding, gas leaks and the rescue of workers from an excavation.

An emergency plan must provide for the following:

- emergency procedures, including an effective response to an emergency
- evacuation procedures
- notifying emergency service organisations at the earliest opportunity
- medical treatment and assistance
- effective communication between the person authorised to coordinate the emergencyresponse and all people at the workplace
- testing of the emergency procedures—including the frequency of testing, and
- information, training and instruction to relevant workers in relation to implementing theemergency procedures.

In preparing an emergency plan, all relevant matters need to be considered including:

- the nature of the work being carried out at the workplace
- the nature of the hazards at the workplace
- the size and location of the workplace, for example, remoteness, proximity to healthservices, and
- the number and composition of the workers, for example, employees, contractors, andother persons at the workplace such as visitors.

➢ Reviewing emergency plans

For emergency plans to remain current and effective they must be reviewed and revised (if necessary) on a regular basis. For example:

- when there are changes to the workplace such as re-location or refurbishments
- when there are changes in the number or composition of staff including an increase inthe use of temporary contractors
- when new activities have been introduced, and
- after the plan has been tested

7.11.3 Excavated Material and Loads Near Excavation

Mechanical plant, vehicles, storage of materials including excavated material or other heavyloads should not be located in the ‘zone of influence’ of an excavation unless the ground support system installed has been designed by a competent person, for example a geotechnical engineer, to carry such loads.

The zone of influence will depend on the ground conditions. It is the zone in which there maybe an influence on the excavation including possible ground collapse (see Figure 2).

Figure 2 Excavated material and loads near

excavationsFigure 2 shows an example of:

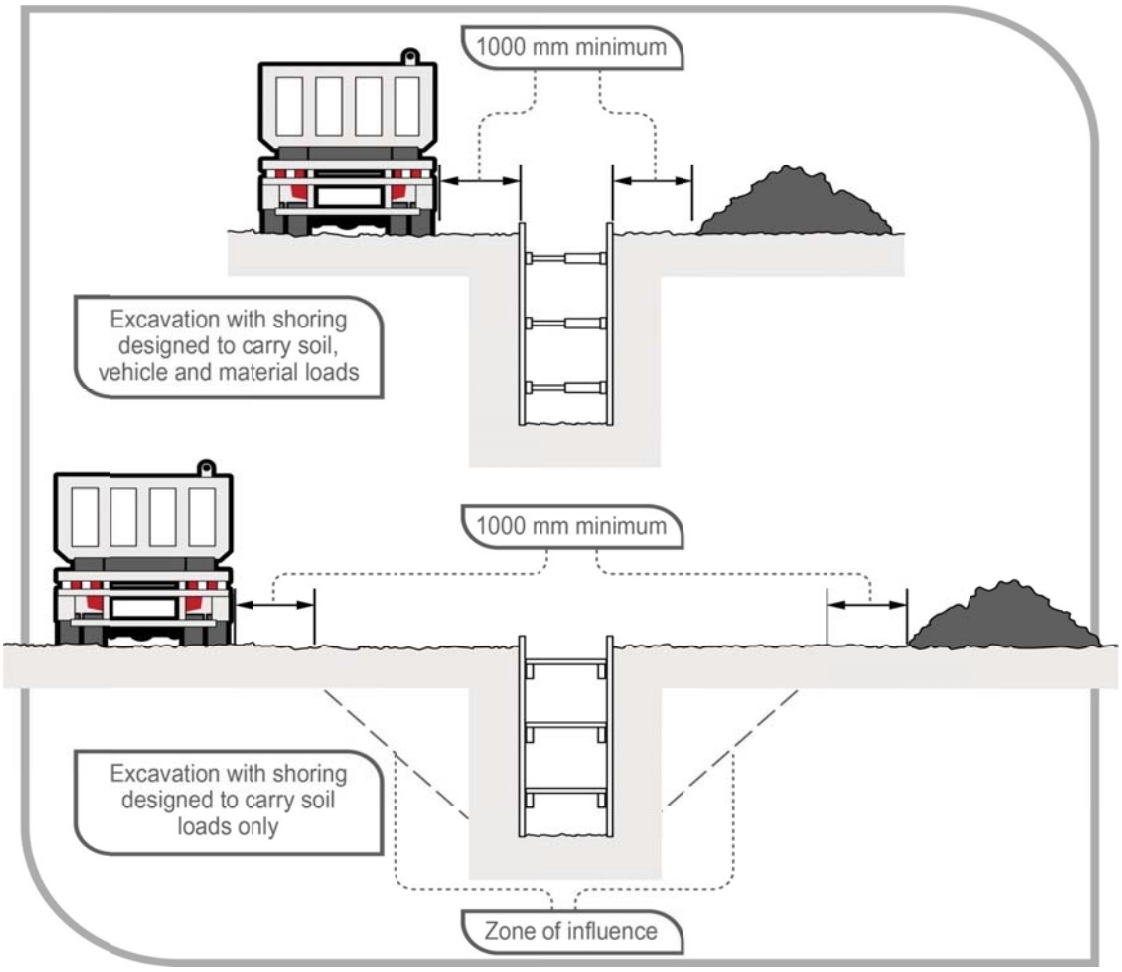

- an excavation with shoring designed to carry vehicle and material loads – this may be required where there is limited space around the excavation for vehicle movement andmaterial storage, and
- an excavation with shoring designed only to carry the load of the excavated faces andthe related zone of influence.

Any material will add a load to the area where it is placed. It is important materials are not placed or stacked near the edge of an excavation as this would put persons working in the excavation at risk, including by potentially causing a collapse of the side of the excavation.

To minimise the risk of ground collapse, excavated or loose material should be stored awayfrom the excavation. Excavated material should be placed outside the zone of influence.

Alternatively, a ground support system should be designed and installed to carry the extraloads including ground water pressures, saturated soil conditions and saturated materials.

If excavating in sloping ground decide which side of the excavation to place the excavated material. Things to consider include:

- ground conditions
- access to the excavation
- existing underground services
- the need for earthmoving machinery or vehicles to work or move along besidethe excavation
- service installation and backfilling requirements, and
- manual work being carried out in the excavation.

Placing material on the lower side of the excavation will reduce the effective height of the excavation (see Figure 3) and reduce the risk of material falling or being washed into the excavation.

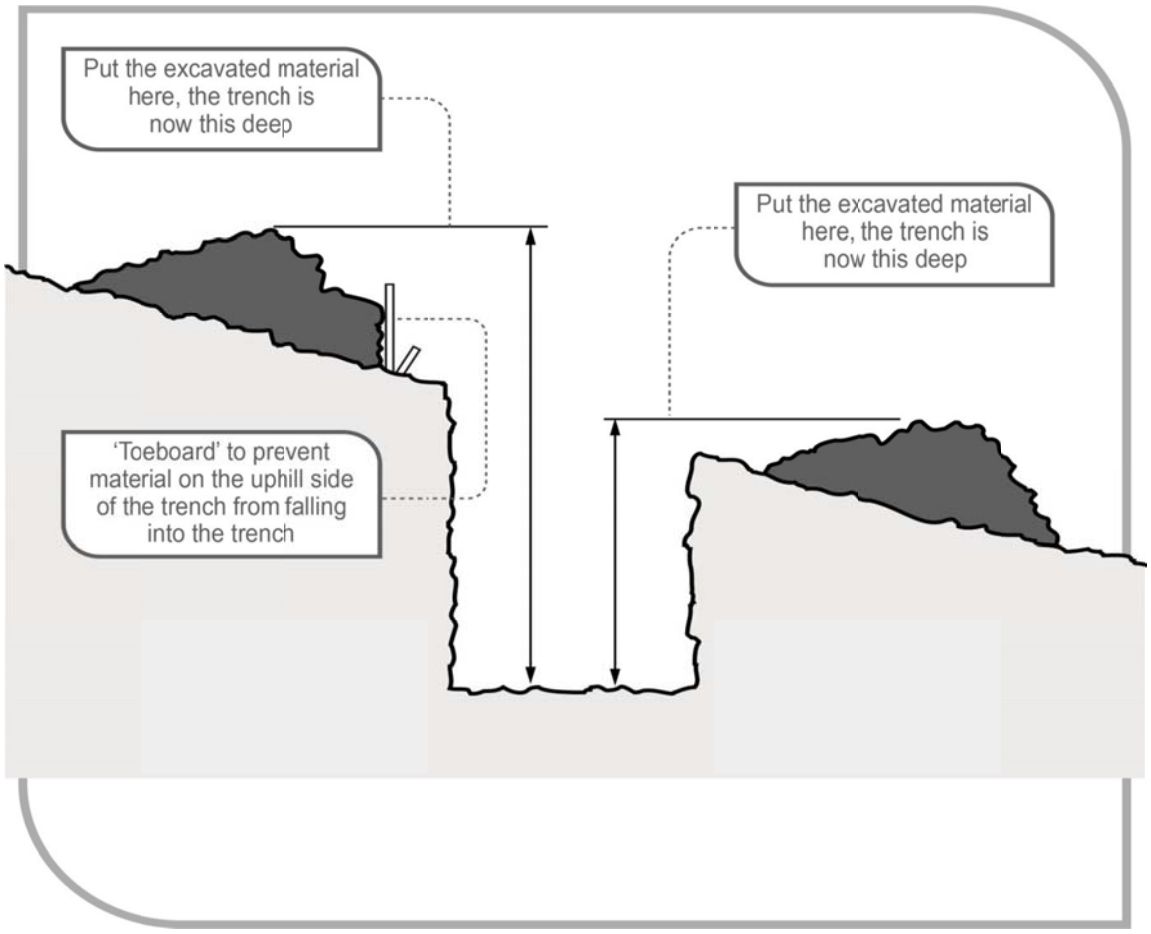

Figure 3 Excavated material impact on effective excavation depth

Care should be taken to ensure material placed on the high side of the excavation does not increase the risk of ground collapse, or flooding by ponding or holding back runoff water.

Excavated material should be placed so it channels rainwater and other runoff water awayfrom the excavation.

When a trench is being excavated beside an old service line, the excavated material shouldbe placed on the side opposite the old service line to prevent excessive loading on previously weakened ground.

If excavated material is placed close to a trench due to obstructions, for example fences, buildings or trees, the weight of the excavated material may overload the sides of a trench. In this case, the ground support system should be strengthened at these locations and barriers, for example toeboards may need to be provided to prevent the material falling intothe excavation.

When dumped in heaps, different soils will assume a characteristic shape and settle naturally at different slopes. The angle which a sloping face of loose earth makes with the horizontal is sometimes referred to as the angle of repose. However, it is poor practice to relate the safe slope of an excavation to the angle of repose, even though the safe slope may be similar in some types of soil to the angle of repose.

7.11.4 Plant and Equipment

A person with management or control of plant at a workplace must:

- take all reasonable steps to ensure the plant is only used for the purpose for which it is designed, unless the person has assessed that the proposed use does not increase therisk to health and safety
- in determining whether or not the proposed use of plant increases the risk to health and safety, ensure that the risk associated with the proposed use is assessed by a competent person, and
- take all reasonable steps to ensure that all safety features, warning devices, guarding, operational controls, emergency stops are used in accordance with instructions and information provided by the person.

Excavation work cannot be carried out safely unless the plant being used is appropriate for the work and maintained in good condition. A range of plant and equipment may be used for excavation work including:

- air compressors
- electric generators
- jack hammers
- oxy-acetylene, for example in gas cutting or welding
- scaffolding
- ladders, and
- many types of handheld plant, for example shovels, picks, hammersand pinch/lever bars.

You should ensure:

- plant is used and operated by a competent person

- guards and operator protective devices are fitted
- the safe working load is displayed and load measurement devices are operating correctly
- the ground is prepared to place plant, especially if the terrain is uneven, and plant is maintained in accordance with the manufacturer/supplier's instructions.

7.11.5 Excavation Methods

The nature of the excavation work being carried out will affect selecting an excavation method and a safe system of work. Careful consideration should be given to health and safety issues when planning the work where the excavation involves anything other than shallow trenching and small quantities of material.

- Trenching

Persons conducting a business or undertaking (PCBUs) who propose to excavate a trench at least 1.5 metres deep must ensure, so far as is reasonably practicable, that the work areais secured from unauthorised entry including inadvertent entry. Additionally, the PCBU must minimise the risk to any person arising from the collapse of the trench by ensuring that all sides of the trench are adequately supported by doing one or more of the following control measures:

- shoring by shielding or other comparable means,
- benching, or
- battering.

Combining these control measures may be the most effective depending on the work environment and characteristics of the excavated material. In built up areas or streets the excavation may have to be fully or partly sheeted or supported to prevent collapse due to localised vehicle movement.

Where a worker enters a trench and there is a risk of engulfment, these control measures should be implemented regardless of the depth of the trench.

A report from a geotechnical engineer may be required to provide information on the stability and safety of a trench excavation. The report should include details of the soil conditions, shoring or trench support requirements, dewatering requirements and longer term effects onstability and safety of the excavation. A competent person, for example an engineer should design support systems or be involved in selecting other ground collapse control measures, for example trench shields.

Shoring, benching and battering may not be required if written advice is received from a geotechnical engineer all sides of the trench are safe from collapse. Advice should state the period of time it applies to and may be subject to a condition that specified natural occurrences may create a risk of collapse.

- Preparation and excavation

Bulldozers, scrapers, excavators and other types of earthmoving equipment are commonly used for either preparing work areas prior to trenching or for the trenching work itself.

For some trench excavations manual work, for example trimming by hand, will be required. Trimming can often be accomplished from outside the trench by shovelling or pushing the material with a long handled tool or shovel to the bottom of the excavation where it can be

picked up by the excavation plant. Risks associated with falls and working with powered mobile plant must be controlled.

- Tunnelling

The nature of tunnelling work is complex and highly specialised, requiring high levels of engineering.

Safe tunnel construction depends on adequate pre-construction engineering investigation of the ground and site and accurate interpretation of the information obtained.

Designers should:

- obtain or be provided with all available relevant information
- be advised of gaps in the information for planning and construction
- undertake or be involved in data acquisition for the site investigation program, and
- have on-site involvement during the engineering investigation.

The information obtained from the engineering investigation and the anticipated excavation methods should be considered in preparing a tunnel design. The design should include:

- details on the tunnel dimensions and allowable excavation tolerances
- temporary and final support and lining requirements for each location within the tunnel
- details of expected tunnel drive lengths and shaft location, and
- other requirements for the finished tunnel.

Designers must also give the PCBU who commissioned the design a written report that specifies the hazards relating to the design of the tunnel that, so far as the designer is reasonably aware:

- creates a risk to the health or safety of persons who are to carry out any constructionwork on the tunnel, and
- are associated only with the particular design and not with other designs of the sametype of structure.

The design should also include information on the excavation methods and ground conditions considered in the design. This will allow the design to be reviewed if another excavation method is chosen or the ground conditions differ from that expected as the excavation proceeds.

The design also needs to take into account the construction methods used to construct the tunnel so that a safe design for construction purposes is achieved.

Tunnelling hazards and risks

Common hazards and risks in tunnel construction generally relate to the confines of working underground including:

- tunnel stability – rock or earth falls and rock bursts
- changing ground conditions – strata and stress fluctuations
- limited space and access, with possible confined spaces involved
- air contamination or oxygen depletion
- fire or explosion
- the use of fixed and powered mobile plant

- the interaction of people and powered mobile plant
- temporary electrical supplies and circuits including loss of power for lightingand ventilation
- compressed air use and high pressure hydraulics
- large scale materials and equipment handling
- overhead seepage, ground and process water
- uneven and wet or other slippery surfaces
- falls of people or objects
- contaminated groundwater
- ground gas and water in-rush
- noise
- vibration
- heat and humidity
- ground loss or settlement at surface level, and
- hazardous substances.

Control measures include:

- ground support, for example tunnelling shields, mesh, rockbolts and shotcrete
- fall protection, for example temporary work platforms
- plant and vehicle traffic management systems
- regular plant maintenance
- pumps or dewatering systems to remove ground water
- mechanical ventilation to control airborne contaminants and air temperature/humidity
- dust extraction
- plant fitted with water scrubbers
- plant fitted with catalytic converters, and
- providing breathing equipment when a hazardous atmosphere is present and cannot beeffectively ventilated by external means.

Using ground support designed for the unique circumstances of the work is essential to control the risk of a collapse or tunnel support failure. All excavation for tunnelling should be supported.

➢ Shafts

Shafts are often constructed to provide access or ventilation to a tunnel. Comparatively shallow shafts can be sunk for investigating or constructing foundations, dewatering or providing openings to underground facilities.

Shafts vary greatly in design and construction technique, depending on their purpose and the local conditions. They may be vertical or inclined, lined or unlined, various shapes, and excavated using various techniques.

Shaft sinking involves excavating a shaft from the top, with access and spoil removal from the top. Other construction methods include raise-boring, which is a method of constructing a shaft or raise where underground access has already been established. Raised bored shafts can be from the surface or from one horizon to another underground. The method can be remotely executed, not requiring people to enter the shaft.

Access to shaft openings should be controlled by using a secure cover that is lockable and

accessible only by a designated person. An alternative means is to use a suitable guard rail and toeboard with gate for access and supporting the sides by steel frames or sets of timber. In special cases support can also be provided by installing precast concrete or steel liners.

Shafts can have special features so design and construction advice should be obtained from a competent person, for example an engineer before excavation and installation. In some cases, special ventilation facilities may be required.

Common hazards and risks involved in shaft construction include:

- shaft dimensions limiting work space, possibly including confined space work
- the potential for ground instability for lifting and removing spoil
- falls and falling objects including fine material and water from the shaft wall
- hoisting equipment such as a winch, ropes and hooks
- hoisting and winching people, materials, spoil and plant
- water in-flow/in-rush and dewatering
- airborne contaminants and ventilation
- confined space
- manual tasks
- hazardous materials
- fire or explosion
- inadequate communication systems
- mobile plant
- noise, and
- emergency exits

Control measures include:

- stabilising the ground at the head of the shaft and removal of spoil
- continuously lining or supporting the shaft
- providing fall protection, for example temporary work platforms
- providing and maintaining hoisting equipment
- installing dewatering systems
- installing mechanical ventilation to control airborne contaminants and airtemperature/humidity
- isolating access to moving parts of plant and equipment
- guiding the working platforms and material
- avoiding overfilling material kibbles and cleaning kibbles before lifting
- closing shaft doors before tipping, and
- cleaning the spillage off doors, stage and steelwork.

7.11.6 Hydraulic Systems

Hydraulic support systems are commonly used to provide temporary or mobile ground support while other ground supports are being installed (see Figure 12).

Ground pressures should be considered prior to installing hydraulic supports. The hydraulic support system should be designed by a competent person in consultation with the geotechnical engineer. The hydraulic capacity of the temporary ground support system mustbe designed to resist the expected ground pressures and potential for collapse.

Hydraulic support systems may become unreliable if not properly maintained and properly used. Frequent inspections of pressure hoses and rams are necessary to detect abrasion, fatigue or damage, for example bent or notched rams.When a trench has been fully supported the hydraulic support systems should be dismantled to prevent costly damage. The hydraulic supports should be inspected, repaired if necessaryand carefully stored prior to re-use.

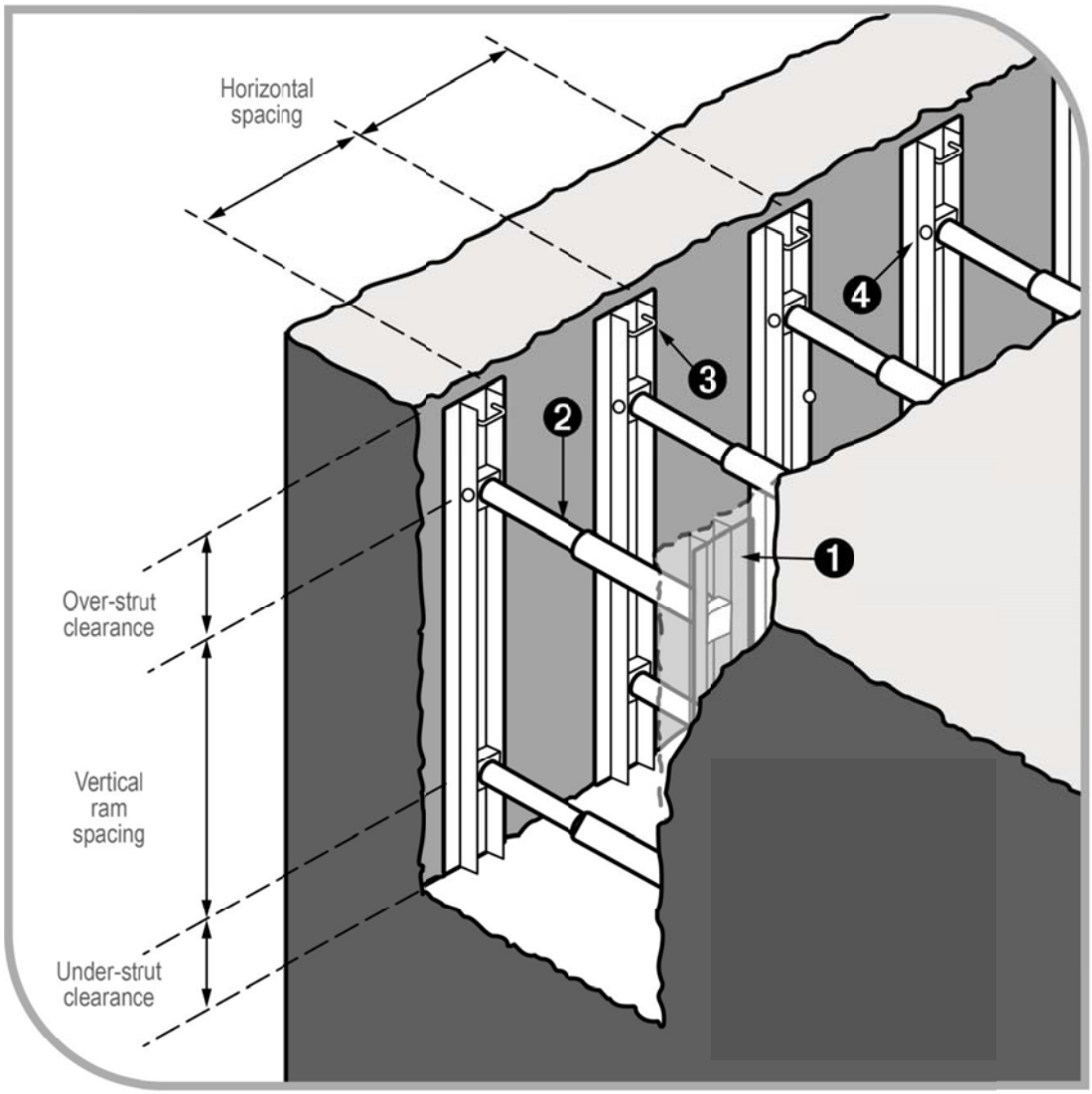

1. Soldier rail
2. Hydraulic soldier strut
3. Lifting/handling point
4. Pin

Figure 12 Hydraulic shoring (soldier set style)

- Steel Sheet Piling

Steel sheet piling is generally used on major excavations, for example large building foundations or where large embankments are to be held back and can be installed prior to excavation work commencing. It is also used where an excavation is in close proximity to adjoining buildings (see Figure 13).

Sheet piling may be used when the ground is so unstable that side wall collapse is likely to occur during excavation, for example in loose and running sand. In such cases, sheet piling should be installed before excavation starts.

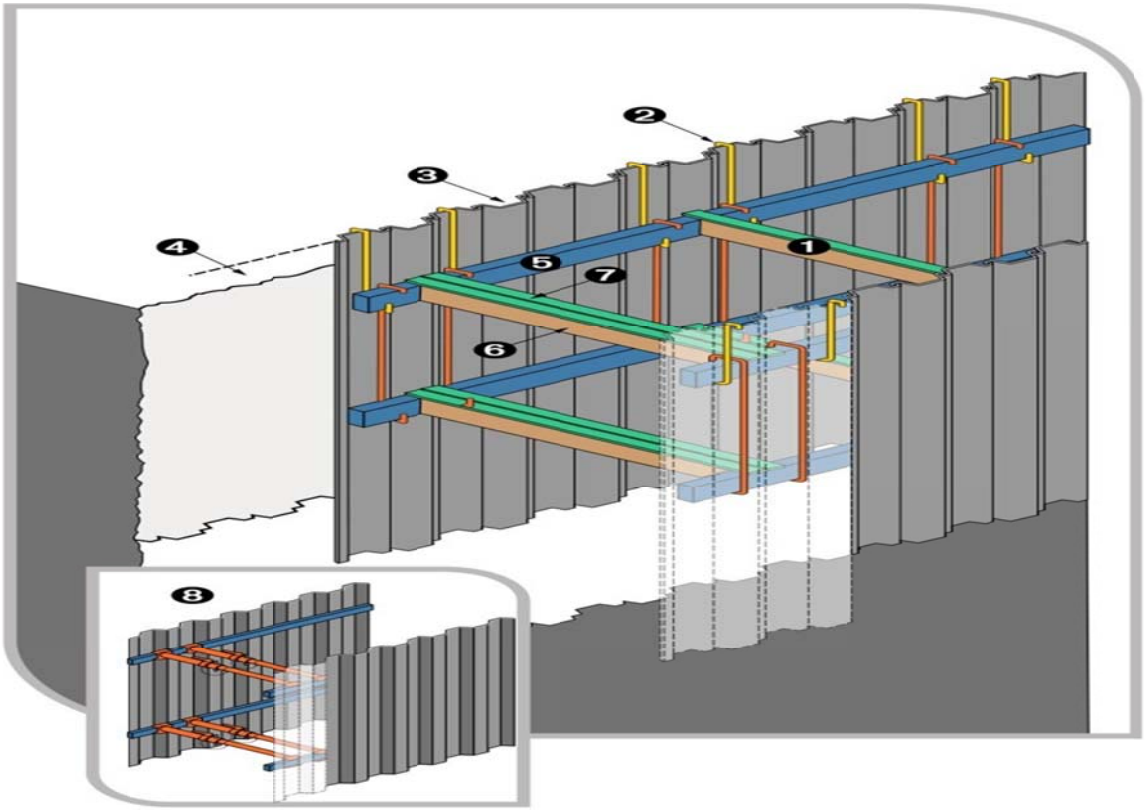

Figure 13 Steel sheet piling

1. Centre capped single tom
2. Hanging bar
3. Sheet piling
4. Minimum height of sheet piling above surface: 300mm
5. Waling
6. Twin toms
7. Twin capping
8. Twin steel jacks should be used where extra strength is required due to heavy loading.

- Steel Trench Sheeting

Other methods of excavation may require the use of steel trench sheeting or shoring. It is positioned and pneumatically driven in to final depth. Toms and waling's are placed into position as the soil is excavated. Although timber can be used it is more efficient to use adjustable jacks or struts (see Figure 14).

Steel trench sheeting is lighter weight than normal sheet piling and in some circumstances may be driven by hand-held pneumatic hammers or electrical operated vibrating hammers. The potential for manual handling injuries to occur in this operation is very high, as is the risk of lacerations due to sharp metal protrusions. These risks should be addressed before the driving of the steel sheet starts. Projections on the underside of the anvil of jack hammers should be removed to prevent damage to the driving cap and potential injury to the operator.

During driving operations, if it is likely workers may be exposed to noise levels in excess of the exposure standard, a method of controlling the noise exposure is required.

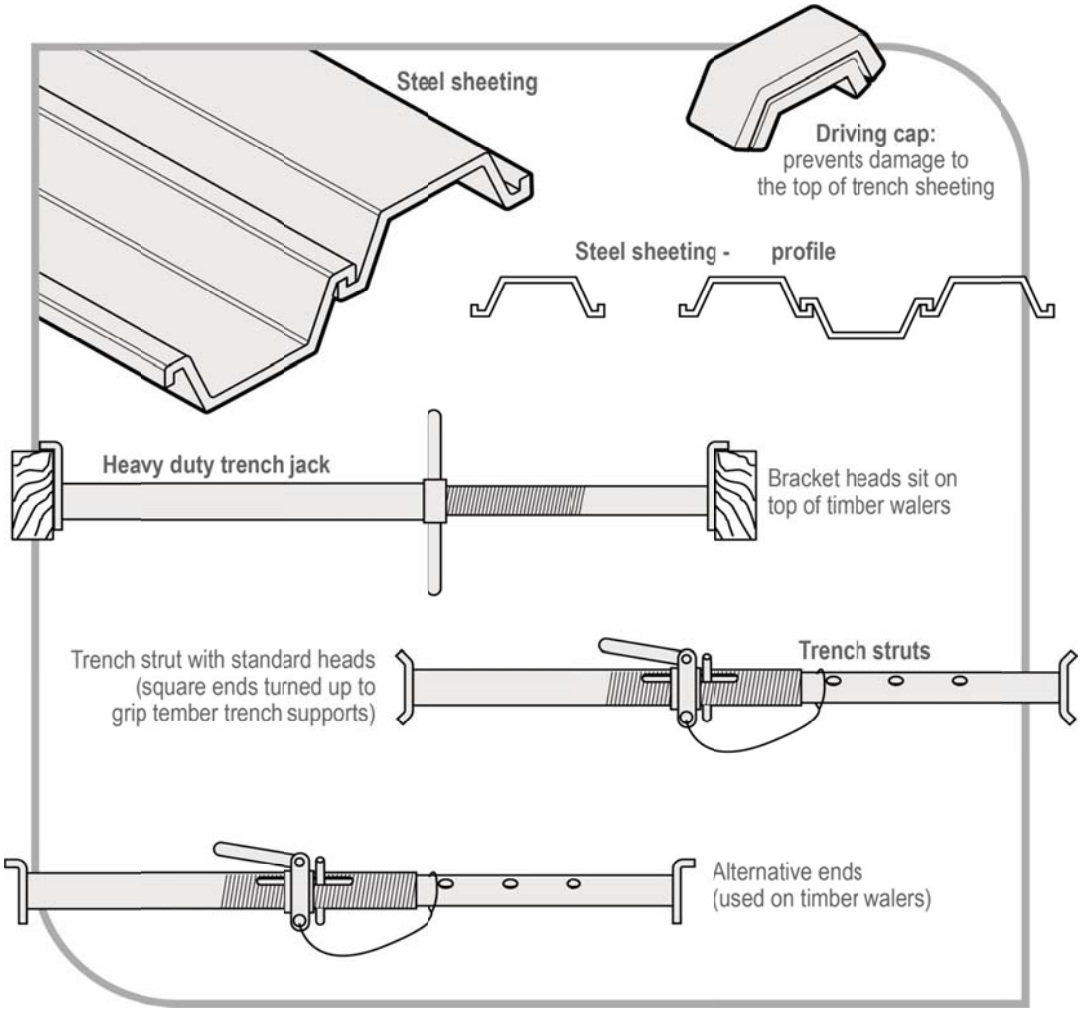

Figure 14 Steel trench sheeting and jacks

- Timber Soldier Sets

The soldier set is a simple form of trench support set which can be formed with steel or timber. This system is mostly used in rock, stiff clays and in other soil types with similar self-supporting properties.

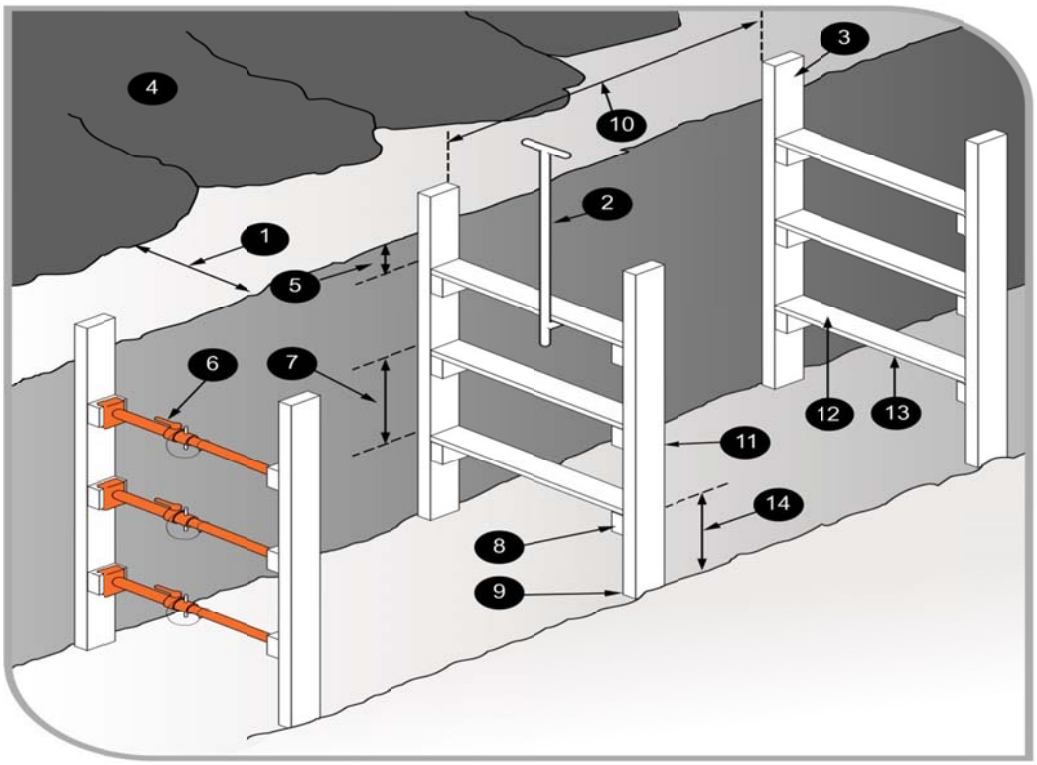

Unlike closed sheeting sets, soldier sets retain the earth where there may be a fault in theembankment. Soldier sets only provide ground support at regular intervals and do not provide positive ground support to the whole excavated face. Open soldier sets are only suitable for use in stable soil types (see Figure 15).

Figure 15 Timber soldier sets

1. Spoil heap at least 1000mm clear of excavation allows access along the side of thetrench top and prevents material from the heap rolling into the trench.
2. Toms placed from surface with special timbering tongs.
3. Soldiers protrude 500 mm above the top of the trench.
4. Spoil heap or pile
5. Top tom no lower than 300 mm from the trench top.
6. For added side support, steel jacks may replace timber toms.
7. Maximum spacing of toms no more than 750 mm.
8. Cleats securely nailed to soldiers before placing soldiers in trench.
9. Soldier resting securely on trench bottom.
10. Maximum spacing between soldier sets 1.5 meters.
11. Soldier, minimum size 150 mm × 38 mm.

12. Tom, minimum size 150 mm × 38 mm.

Tom should be long enough to force soldiers firmly against trench sides. To prevent excessive bowing of soldiers against irregular trench sides, wood packing, between the trench wall and the soldier, may be used.

Space between the bottom tom and trench floor should be sufficient to allow installation of apipe — normally, no more than 1000 mm.

- Closed sheeting

Closed sheeting is where vertical timber or metal members are used to fully cover and support a trench wall and which are in turn supported by other members of a ground support system.

Figure 16 Example of closed sheeting

Side lacing is a form of closed sheeting used primarily to ensure worker safety by preventing soil from slipping by the placement of fill behind timber boards or steel plates (see Figure 17). Side lacing is used in all types of ground, and is particularly useful where long or large diameter pipes are to be installed and in variable ground conditions where steel or timber supports are difficult to install. Side lacing should be firmly wedged into the ground to prevent it from moving when fill is placed against it.

When closed sheeting or side lacing is used to prevent ground collapse, workers should not:

- enter the excavation prior to the installation of the sheeting or lacing
- work inside a trench, outside the protection of sheeting or lacing

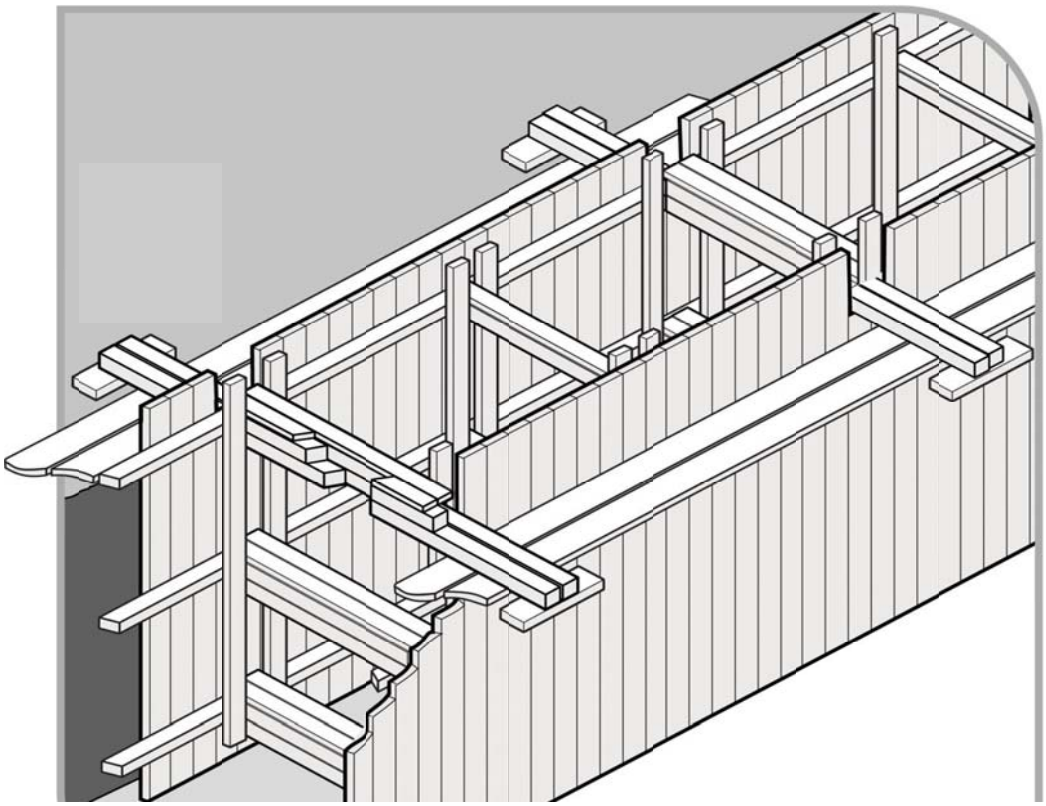

- enter the excavation after sheeting or lacing has been removed, and
- enter an area where there is sheeting or lacing, other than by a ladder.

Figure 17 Side lacing in sand trench

➢ Ground anchors

A ground anchor is a tie-back to the soil behind the face requiring support and is typically used with steel sheet piling (see Figure 18). Ground anchors may be installed in either

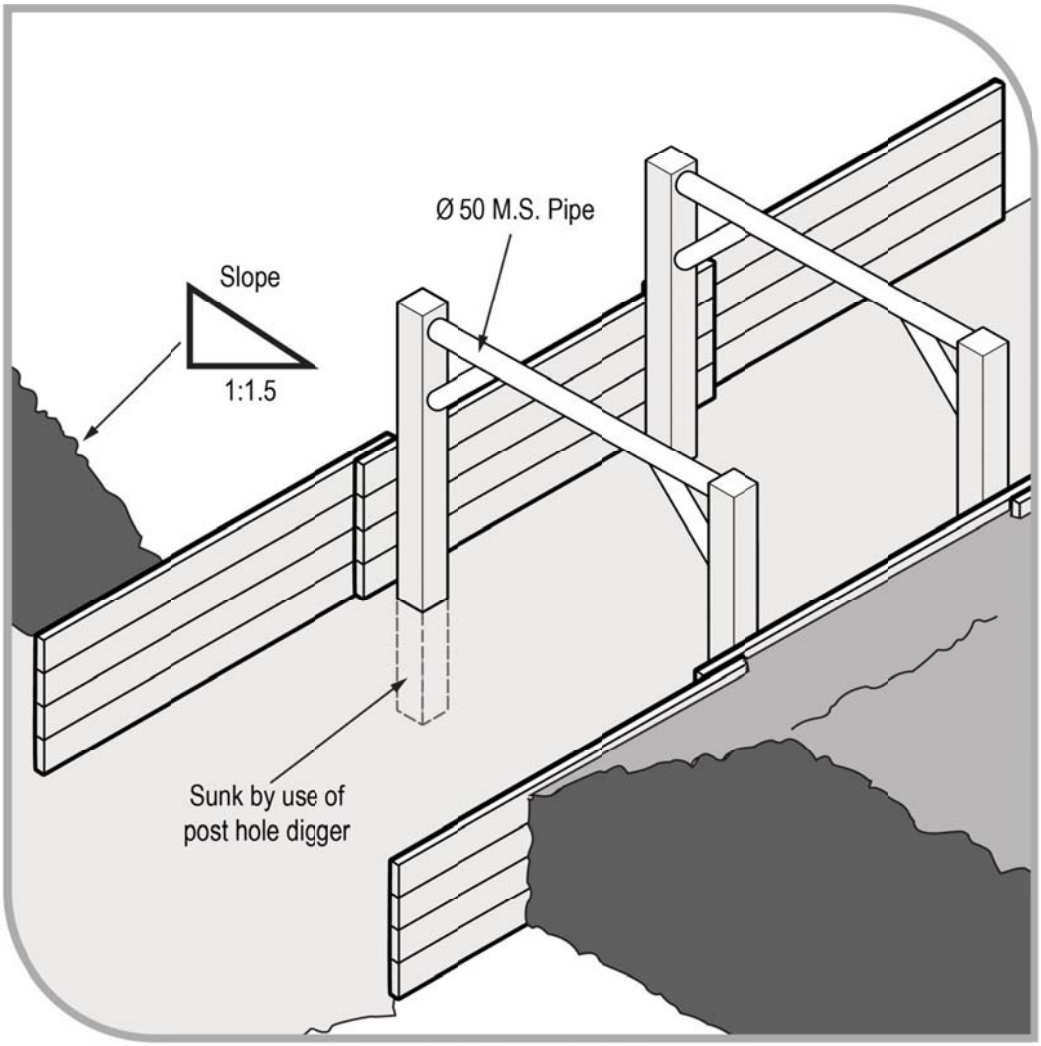

granular or clay soils. The design of ground anchors should be carried out by a competentperson, for example a geotechnical engineer.

In granular soil, the anchorage zone is usually a plug of grout located behind the active soil limit line. This plug resists the tension force induced in the stressing cables, due to the shearand cohesion forces developed along its length.

These forces can be due, in part, to the overburden. Removal of soil above installed

ground

anchors should only be carried out after approval has been received from acompetent person.

Figure 18 Ground anchors for supporting steel sheet piling

Removal of the soil between the retaining wall and the active soil limit line may cause sheet piling to bend. This bending will release the load in the stressing cable, and render the ground anchor useless and dangerous to workers in the excavation area.

The ground anchor may not develop its original load carrying capacity on replacement of the soil. The anchorage of the stressing cable at the face of the sheet piling may be also dislodged or loosened. This depends on the type of stressing cable and the respective anchoring systems. While the ground anchoring system is operative, periodic checks with

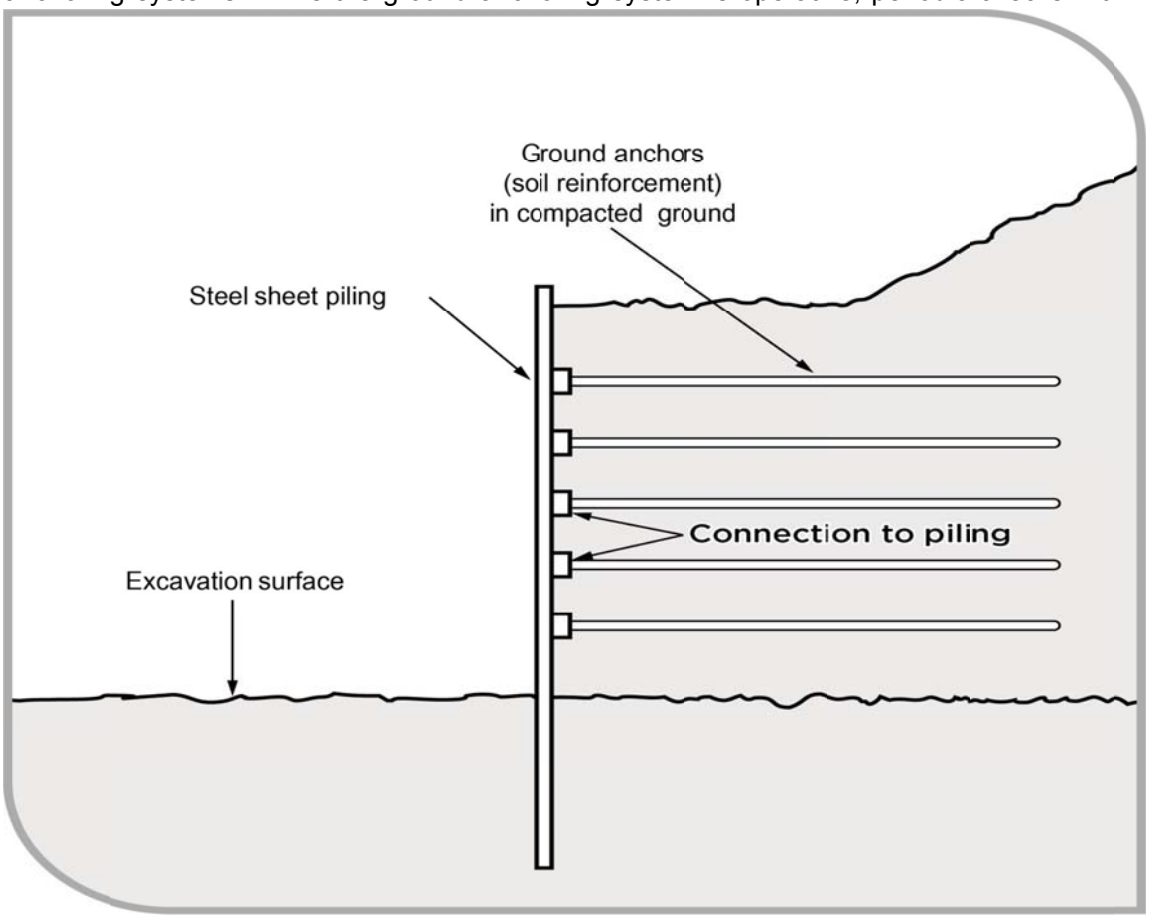

hydraulic jacks and pressure gauges are used to assess anchor behaviour over long periods.

7.11.7 Removal of Shoring Supports

Shoring and all support systems should be removed in a way that protects workers from ground collapse, structural collapse or being struck by structural members. Before removal begins, temporary structural members may need to be installed to ensure worker safety.

When removing shoring, the support system should be extracted or dismantled in reverseorder to its installation. Persons performing the work in the excavation should not work outside the protection of the ground support system. No part of a ground support system should be removed until the trench is ready for final backfill and compaction.

- Shields and boxes

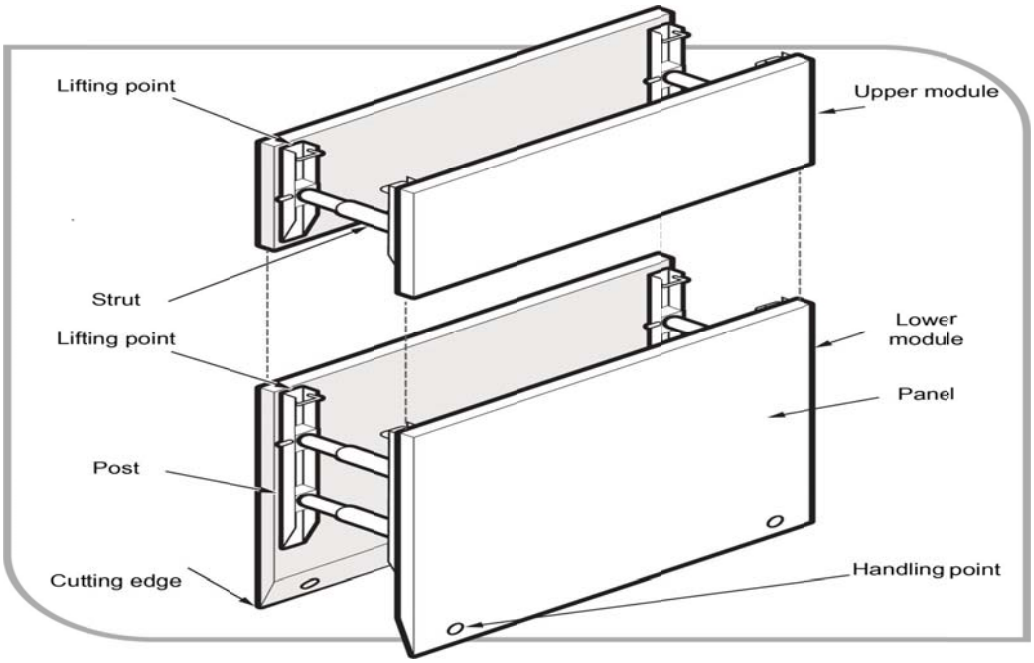

A shield is a structure, usually manufactured from steel, which is able to withstand the forces imposed by a ground collapse and protect workers within it. Shields can be permanently installed or portable and designed to move along as work progresses.

Many different shield system configurations are available for hire or purchase. Figure 19shows a typical trench shield.

Figure 19 Typical trench shield

Shields and boxes used in trenches are often referred to as trench shields or trench boxes, and are designed and constructed to withstand the earth pressures of particular trench depths and ground types. They incorporate specific lifting points for installation and removal.

Trench shields and boxes differ from shoring as shoring is designed to prevent collapse, while where shielding and boxes are only designed to protect workers if a collapse occurs.

Trench shields and boxes are useful where it is not reasonably practicable to install other

forms of support. They are mainly used in open areas where access is available for an excavator or backhoe to lower and raise the boxes or shields into and out of a trench. Theyare generally not suitable where access is difficult and ground conditions prevent the use oflifting equipment.

Steel boxes for trench work can be light or heavy duty construction depending on the depth of the trench and ground conditions. Trench shields and boxes should be designed by a competent person, for example an engineer, and be pre-manufactured to job specific dimensions.

Used correctly, shields and boxes can provide a safe work space for workers needing to enter an excavation. Trench shields and boxes should be maintained or they may fail unexpectedly, particularly if they have been abused or misused. The manufacturer's instructions for the installation, use, removal and maintenance of shields and boxes should always be followed.

Trench boxes should not be subjected to loads exceeding those which the system was designed to withstand. Earth pressures are reduced when correct benching and battering practices are used.

Shields and boxes should be stored and transported in accordance with the manufacturer's instructions. Heavy duty equipment may require disassembly for transport.

Boxes should be regularly inspected for damage. They should only be altered or modified with the approval of a competent person.

8.0 QUALITY CONTROL

8.1 HEI QC personnel shall be assigned to ensure the quality control and assurance requirement of the project.

8.2 HEI QC Inspector shall coordinate with other inspectors to conduct inspection as required in SATIP Piping Above ground Installation Works.

8.3 HEI QC Inspector shall be responsible to conduct all required inspections/documentation and to ensure that all applicable requirements, codes, and standards are complied with.

8.4 Full traceability of piping and structural shall be done in accordance to schedule CAP.

8.5 Calibration shall be done as required for all machines and tools going to be used in the work in accordance with schedule CAP.

9.0 HEALTH SAFETY AND ENVIRONMENT REQUIREMENTS

HSE requirement should be follow HSE Plan as Attachment-5, document no. HSE-HEI-PJT-HP-11.